G-2360-C9
Immersion Collection
Immersion Bidet Set

Product Features

- 4-hole installation
- Vertical spray with vacuum breaker
- Includes manual pop-up drain assembly with overflow

Code compliance

- ADA

Available Finishes

- 24K Polished Gold
- 24K Brushed Gold
- Architectural Black™
- Matte Black
- Polished Chrome
- Polished Nickel
- Steelnox® (Satin Nickel)
- Architectural White
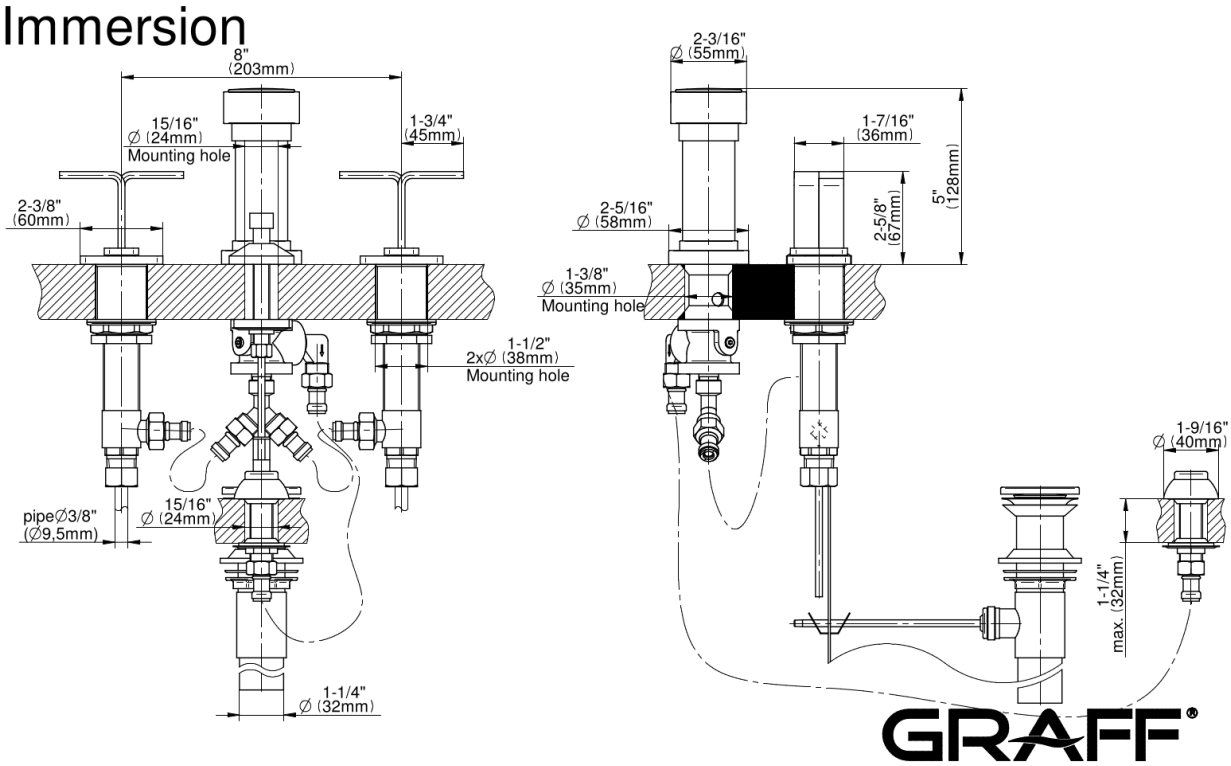
* Special order finish - call for availability