FIN92
Sinks and Bathtubs Collection
Backrest for Finezza Bathtub

Product Features

- Matches Finezza bathtub

Available Finishes

- Architectural Black™
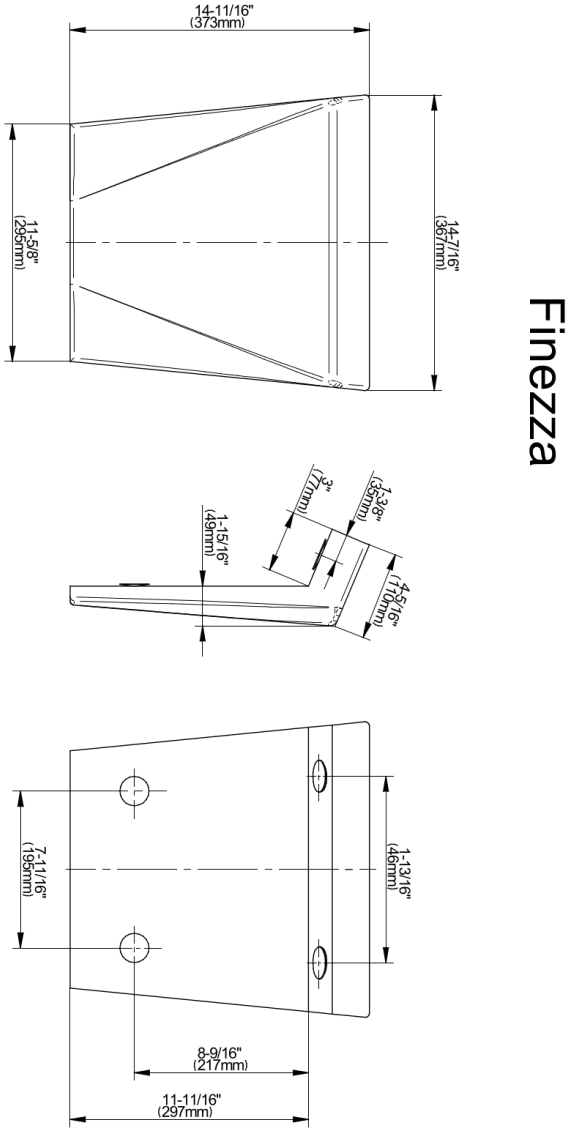
* Special order finish - call for availability