G-8097-C17E1-T

M.E. M-Series Stop/Volume Control Valve Trim with Handle

Product Features

- Single metal handle
- Decorative trim plate
- Use with G-8076 Stop/Volume Control Rough Valve with Pass-Through or G-8077 Stop/Volume Control Rough Valve

Code compliance

- ADA

Available Finishes

- 24K Polished Gold
- 24K Brushed Gold
- Brushed Brass PVD®
- Architectural Black™
- Brushed Nickel
- Brushed Onyx PVD®
- Rose Gold / Brushed Copper PVD®
- Gunmetal PVD®
- Matte Black
- Olive Bronze
- Onyx PVD®
- Polished Brass PVD®
- Polished Chrome
- Polished Nickel
- Rose Gold / Polished Copper PVD®
- Steelnox® (Satin Nickel)
- Unfinished Brass
- Unfinished Brushed Brass
- Architectural White

* Special order finish - call for availability

TERRA Series

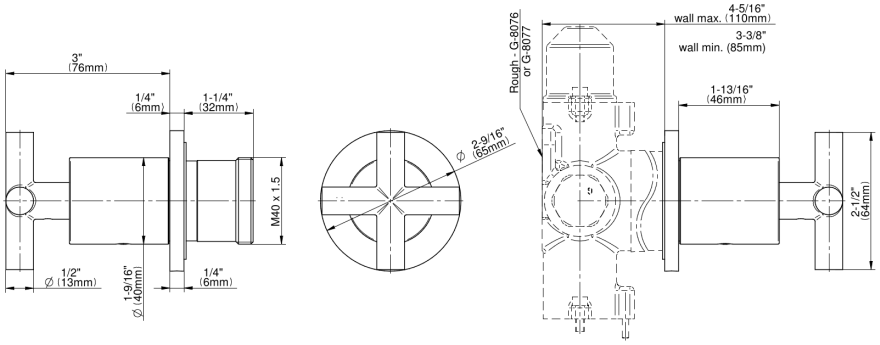

CUTTING EDGE DESIGN