G-8076
3/4" Stop/Volume Control Rough Valve with Pass-Through

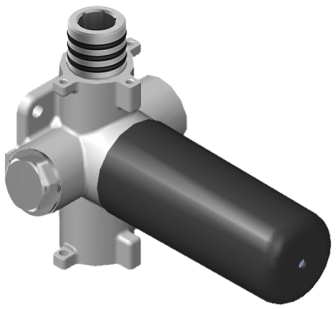

Product Features

- 12.3 gpm @ 60 psi
- 3/4" universal inlets/outlets with female threads
- Stacking inlet and pass-through port feature
- Supplied with protective plastic cover
- CalGreen compliant dependent on functions

Code compliance
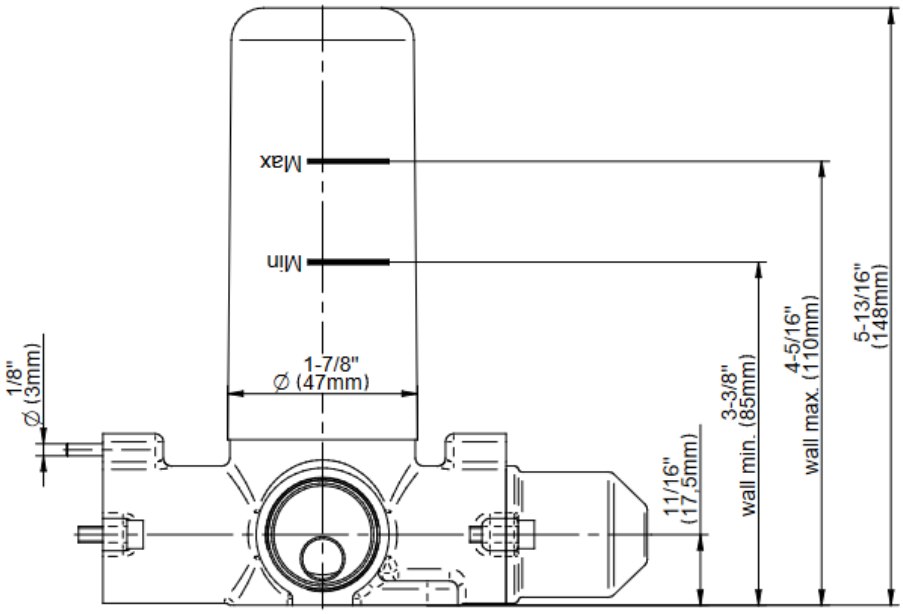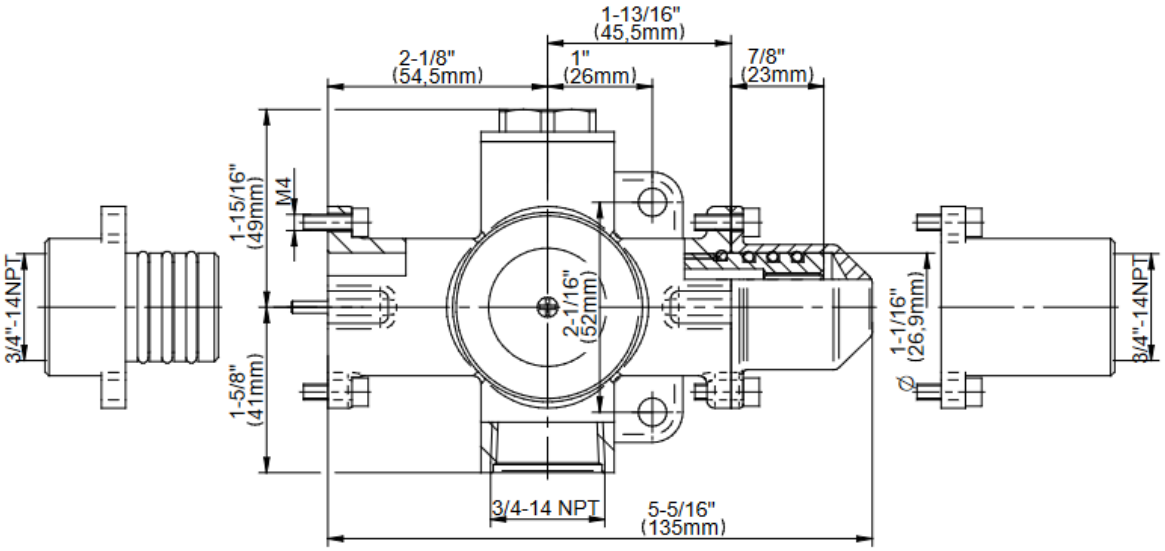
- CALGreen