M.E.
G-9137
M.E. Towel Ring

Available Finishes

- 24K Polished Gold
- 24K Brushed Gold
- Brushed Brass PVD®
- Brushed Gold PVD®
- Architectural Black™
- Brushed Nickel
- Brushed Nickel PVD®
- Brushed Onyx PVD®
- Brushed Tuscan Bronze PVD®
- Rose Gold / Brushed Copper PVD®
- Gunmetal PVD®
- Matte Black
- Olive Bronze
- Onyx PVD®
- Polished Brass PVD®
- Polished Chrome
- Polished Gold PVD®
- Polished Nickel
- Polished Nickel PVD®
- Polished Tuscan Bronze PVD®
- Rose Gold / Polished Copper PVD®
- Satin Gold PVD®
- Steelnox® (Satin Nickel)
- Un?nished Brass
- Unfinished Brushed Brass
- Vintage Brushed Brass
- Warm Bronze PVD®
- Architectural White

* Special order finish - call for availability
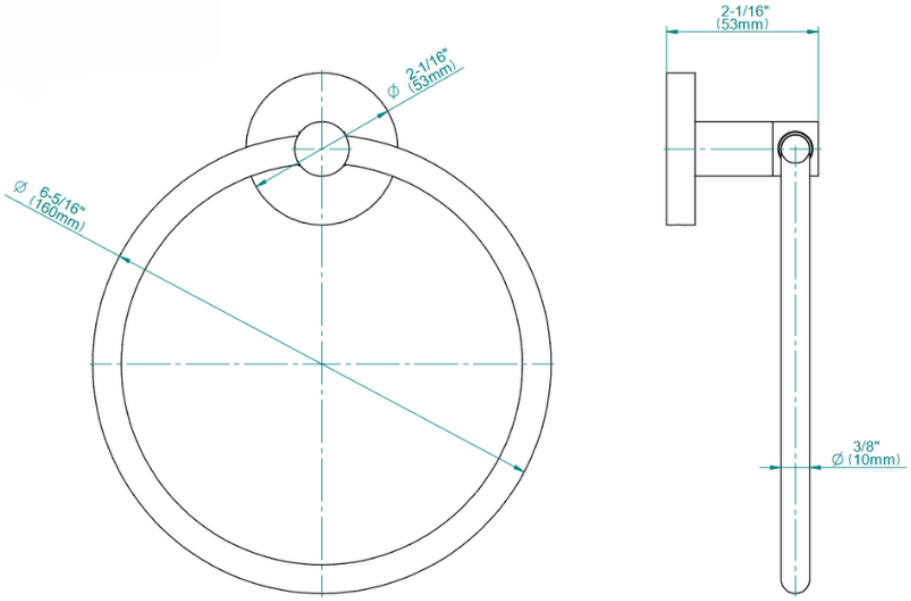
M.E.
G-9137
M.E. Towel Ring