MUS66-OF
Sinks and Bathtubs Collection
Musa Bathtub in Sleek-Stone®

Product Features

- Constructed from Sleek-Stone®, comprised of 75% natural dolomite minerals bonded with a unique resin to create a naturally durable material
- Freestanding installation
- With integrated overflow
- No faucet holes
- Includes G-9985 pop-up drain with overflow in chosen finish
- ~481 lb
- 63 gal capacity
- Resistant to UV, scratches, impacts, mold and mildew, stains, and thermal shock
- Smooth, non-porous and fully deaerated

Available Finishes

- Gloss Sleek-Stone®
- Matte Sleek-Stone®

* Special order finish - call for availability

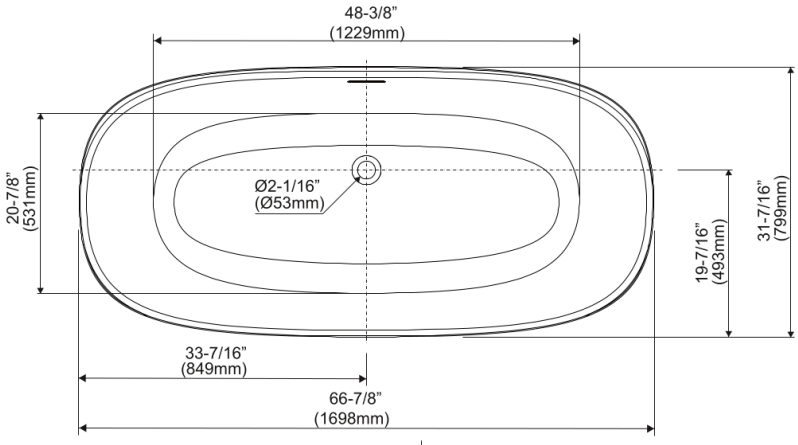

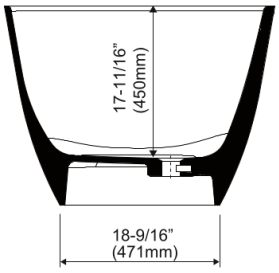

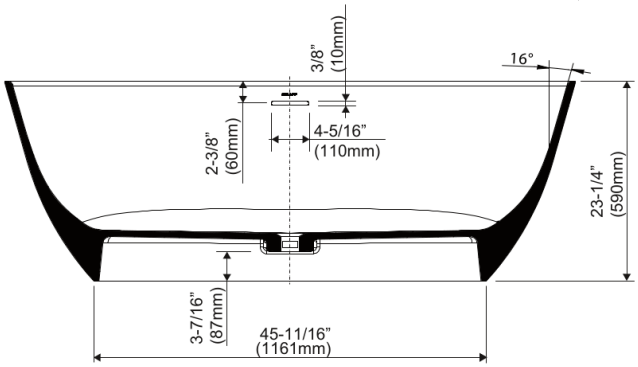

Bath