E-18037-C19E-T

Uni-Box Series

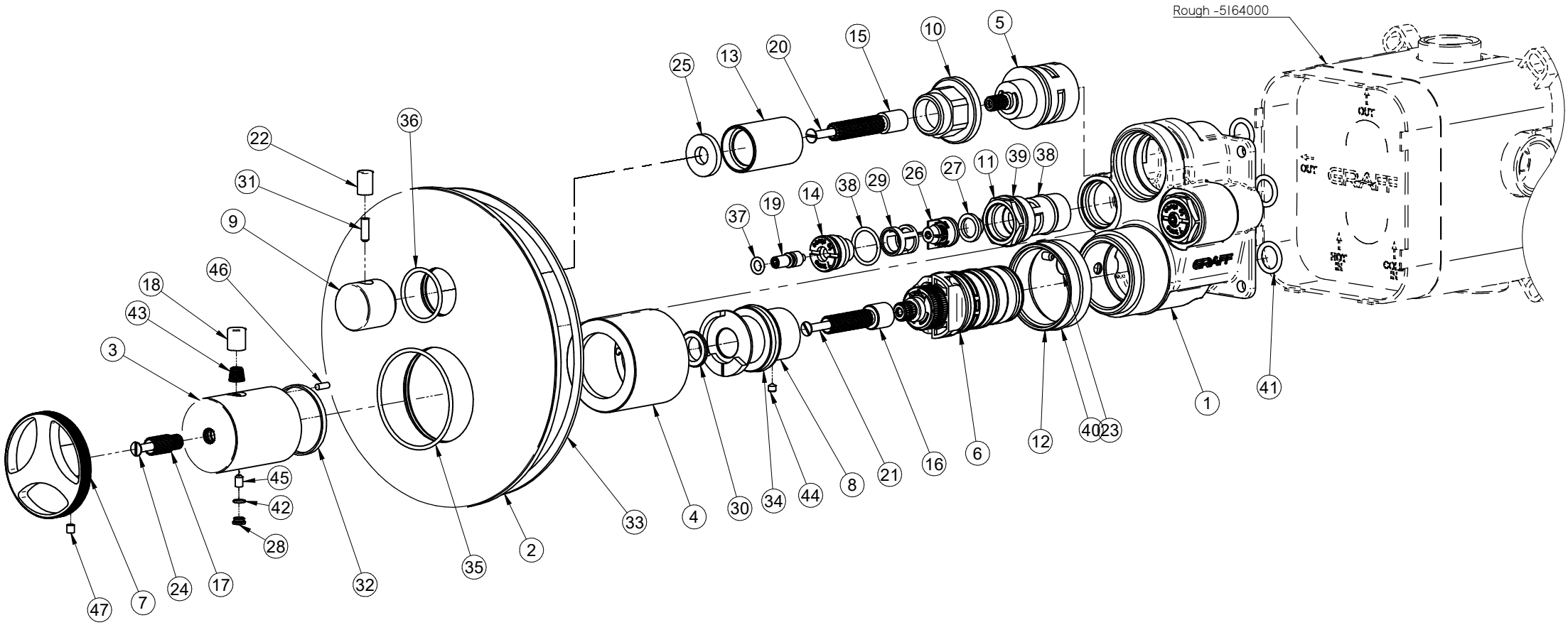

GRAFF®
Art of Bath