GY5.690A-LM62MW

ME Series

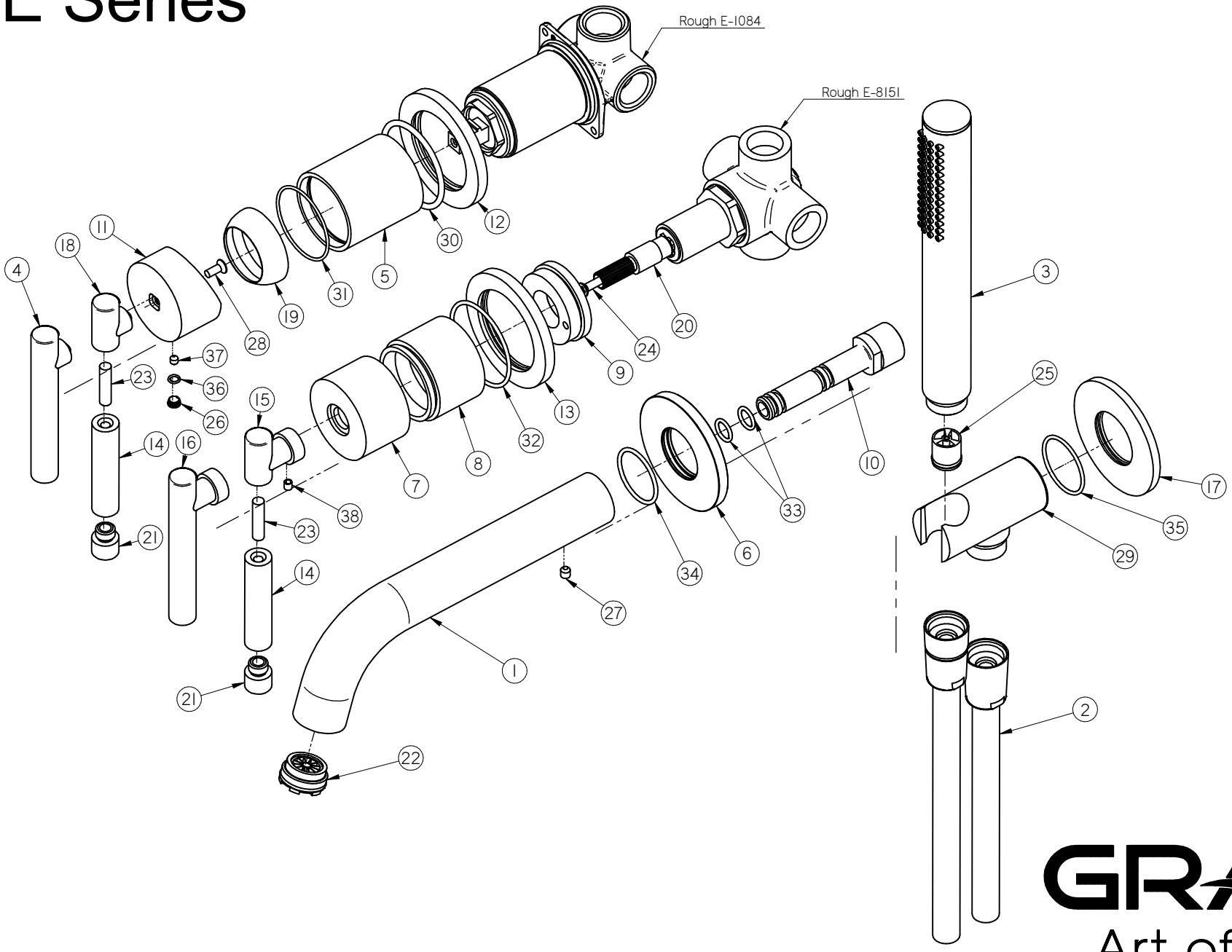

GRAFF®
Art of Bath