E-1950-C16L

TOPAZ Series

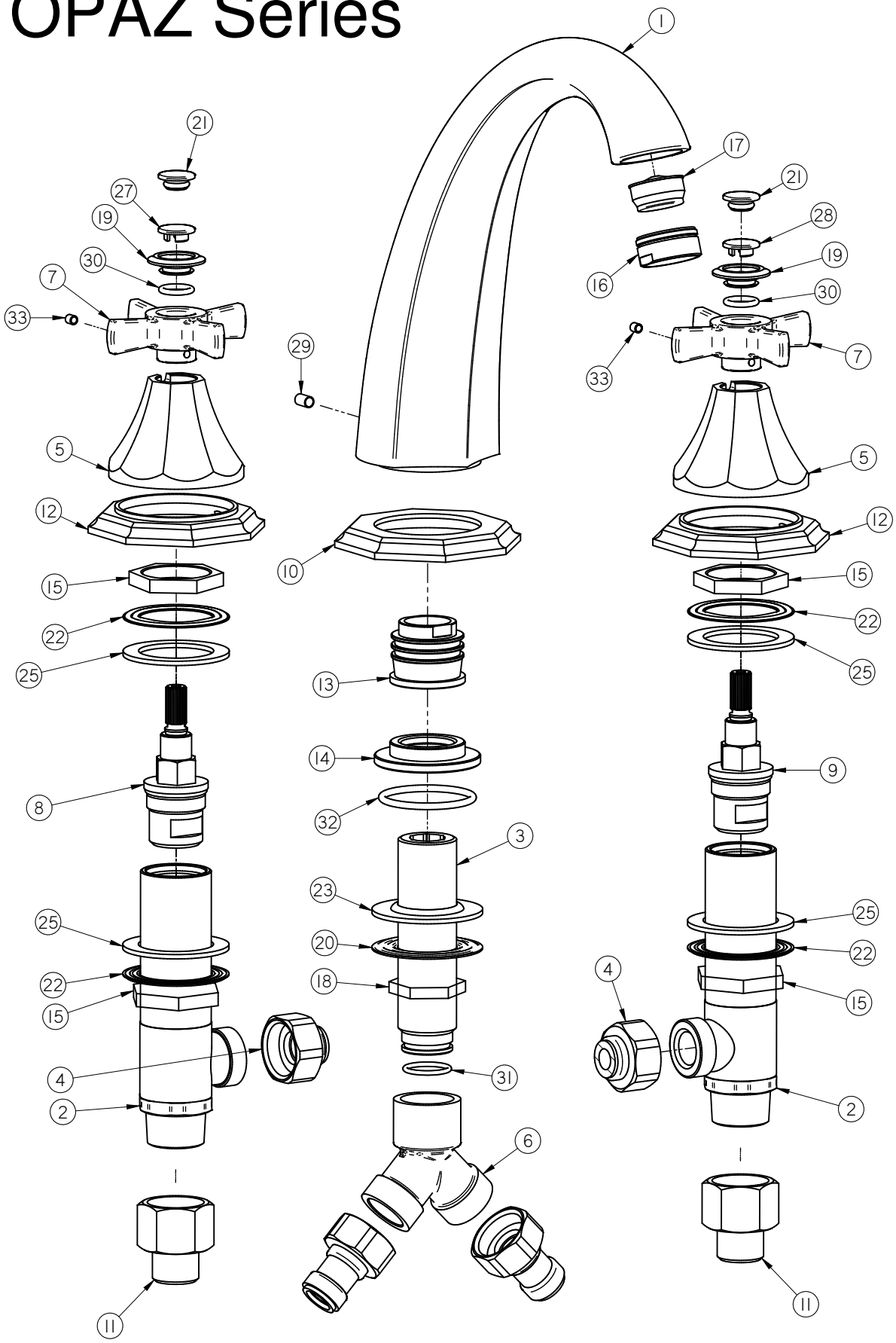

GRAFF®

CUTTING EDGE DESIGN