# E-18036-LM56E-T

## Uni-Box Series

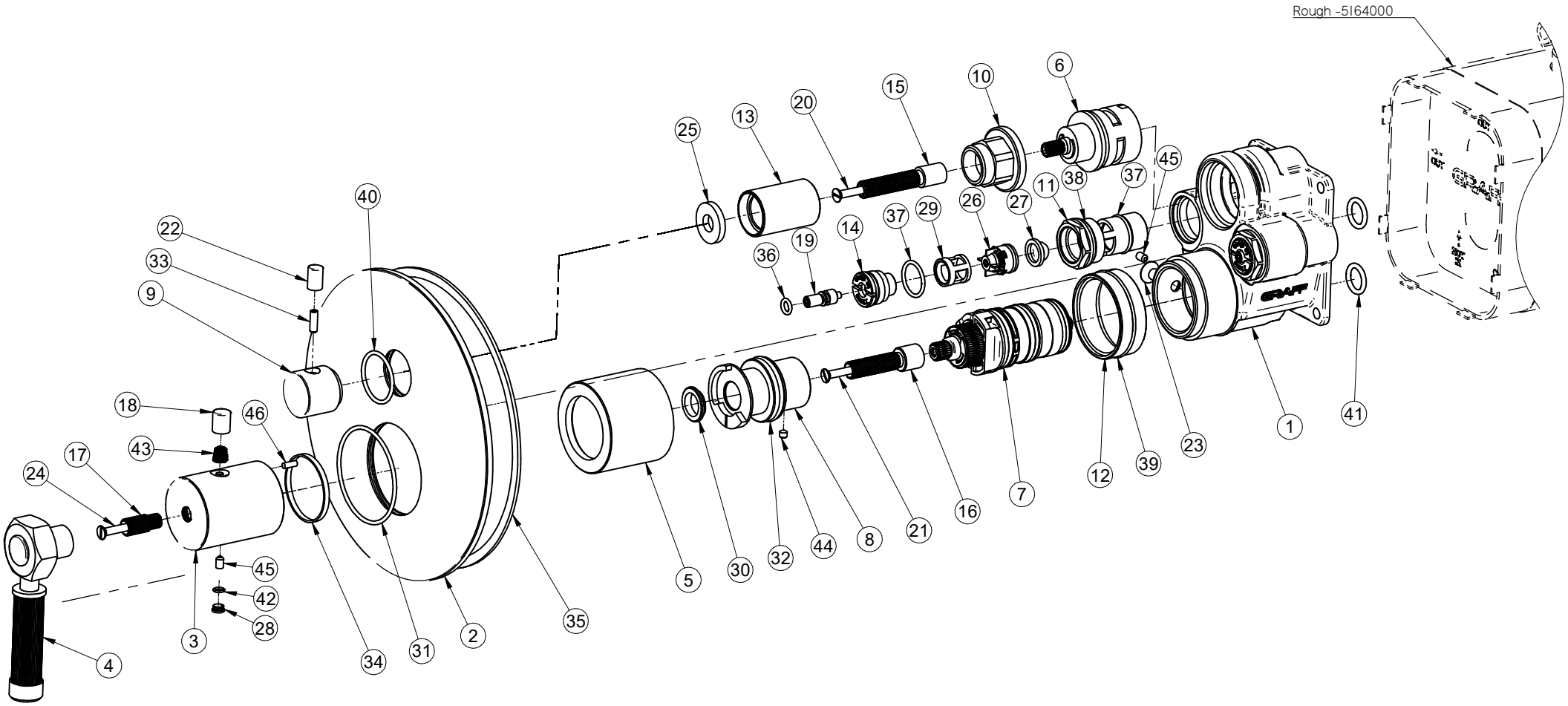


GRAFF®
Art of Bath