EM7.690-C17E0

ME Series

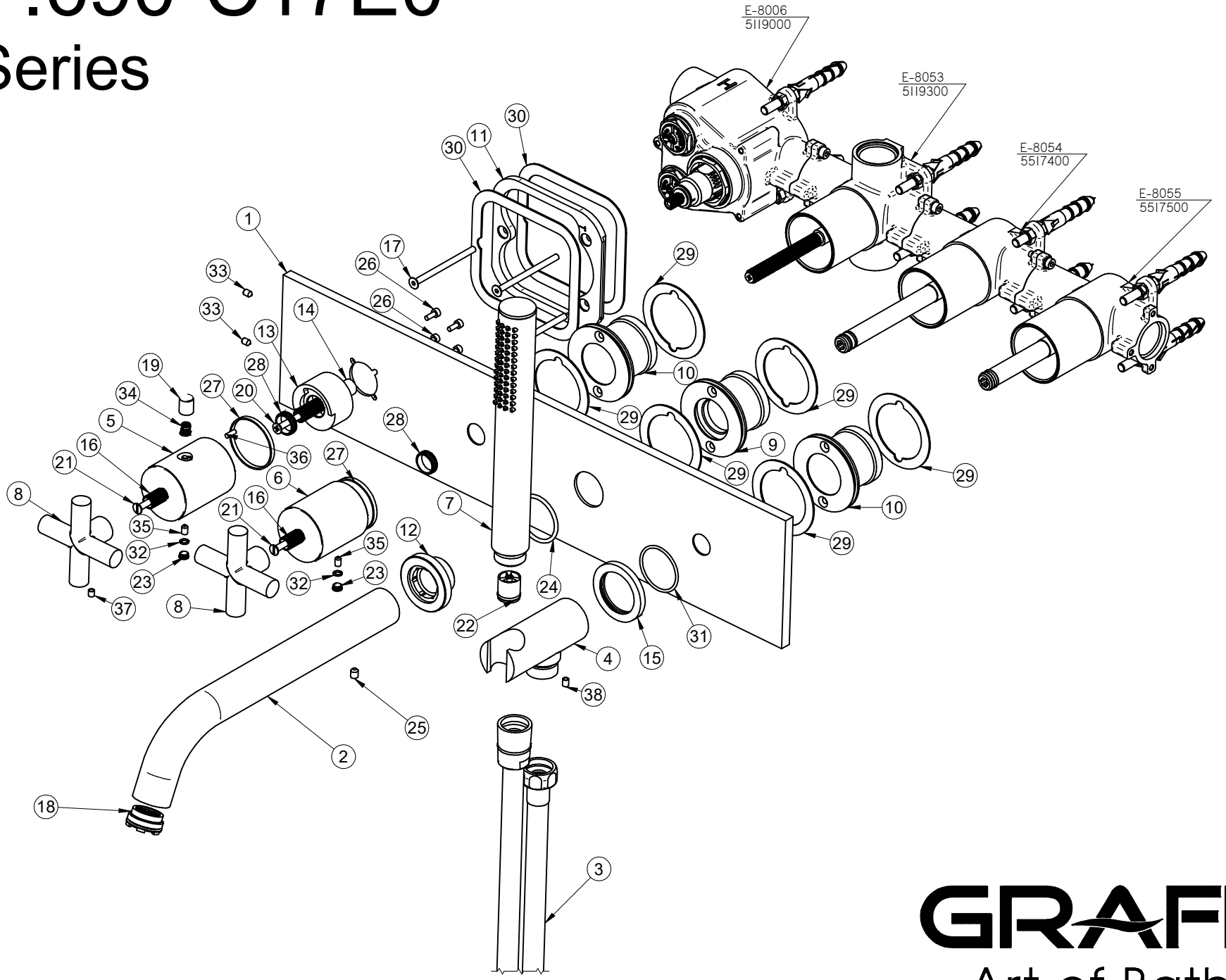

GRAFF®
Art of Bath