RB-DSS
M.E, TERRA Series

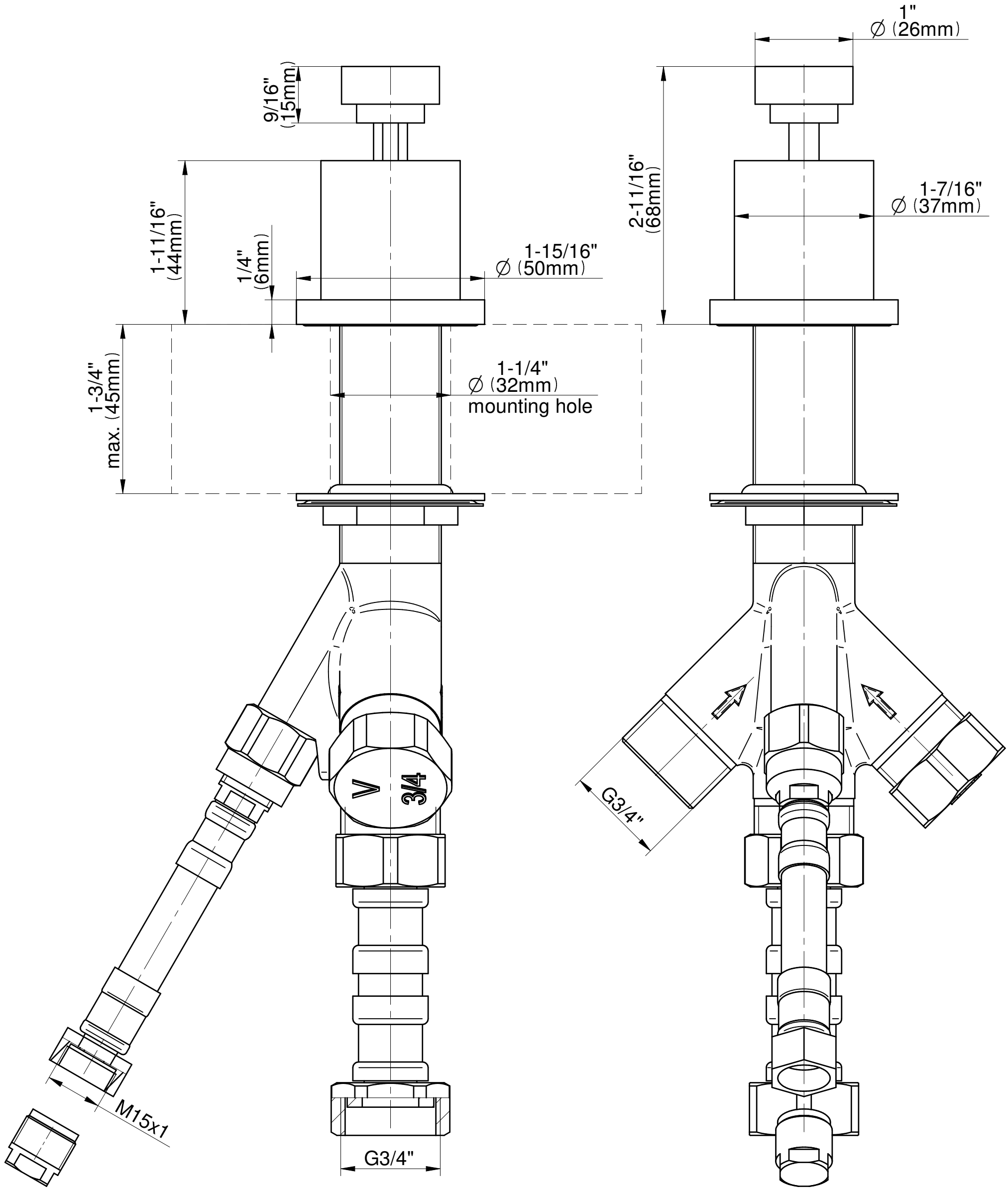

GRAFF®
CUTTING EDGE DESIGN