E-8178HH-C20E0-T

VIGNOLA Series

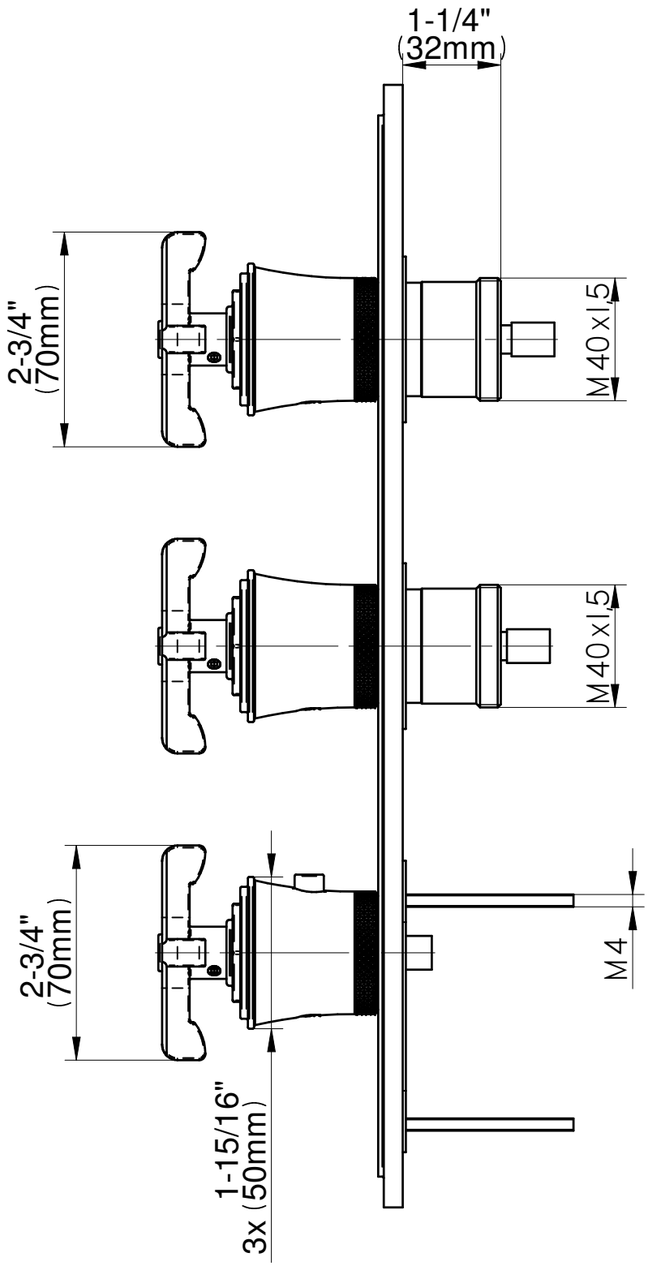

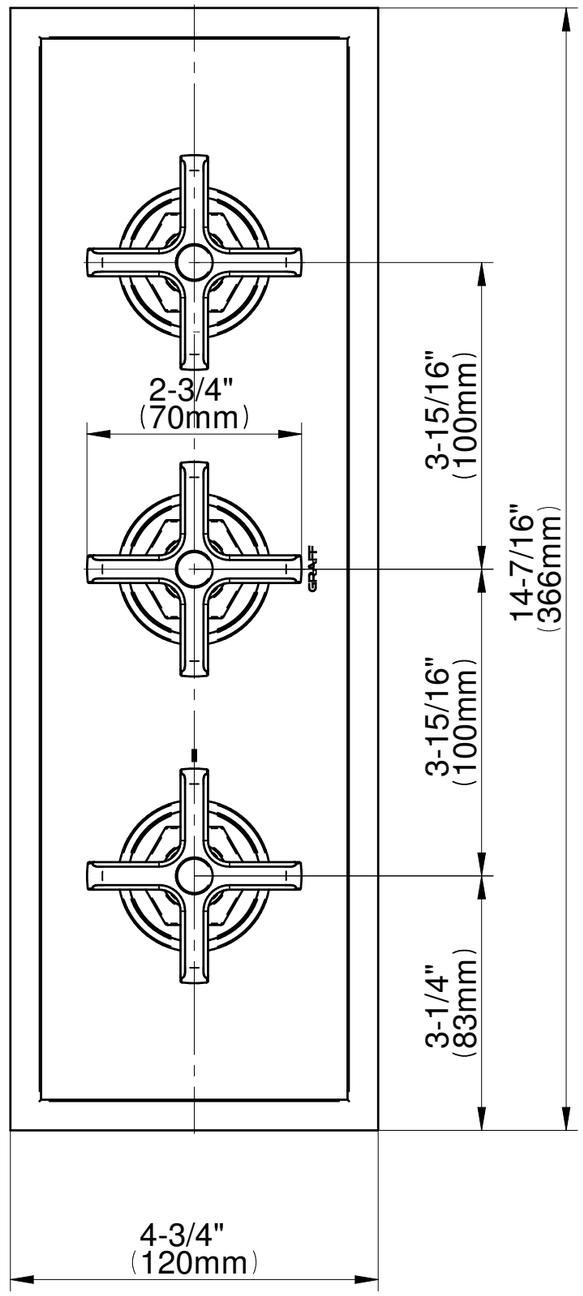

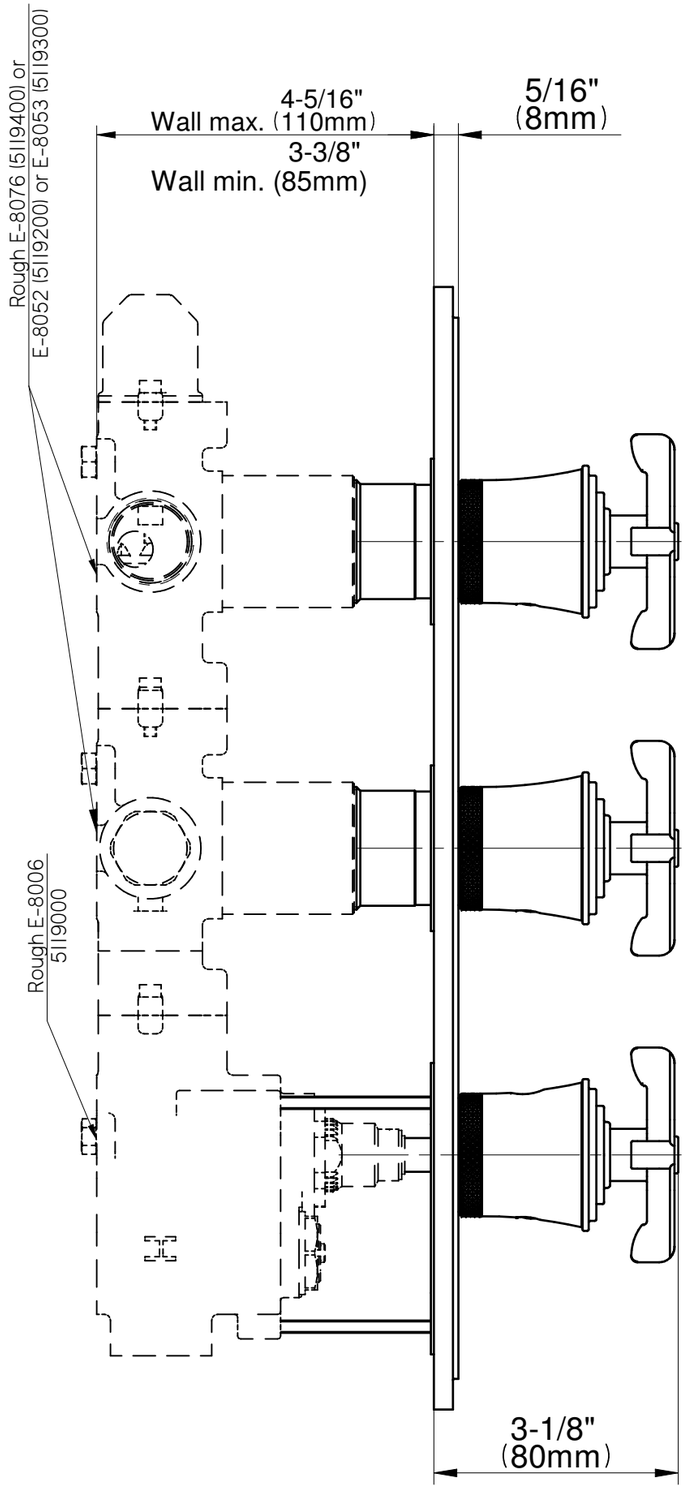

GRAFF®

CUTTING EDGE DESIGN