E-8236

Shower components Series

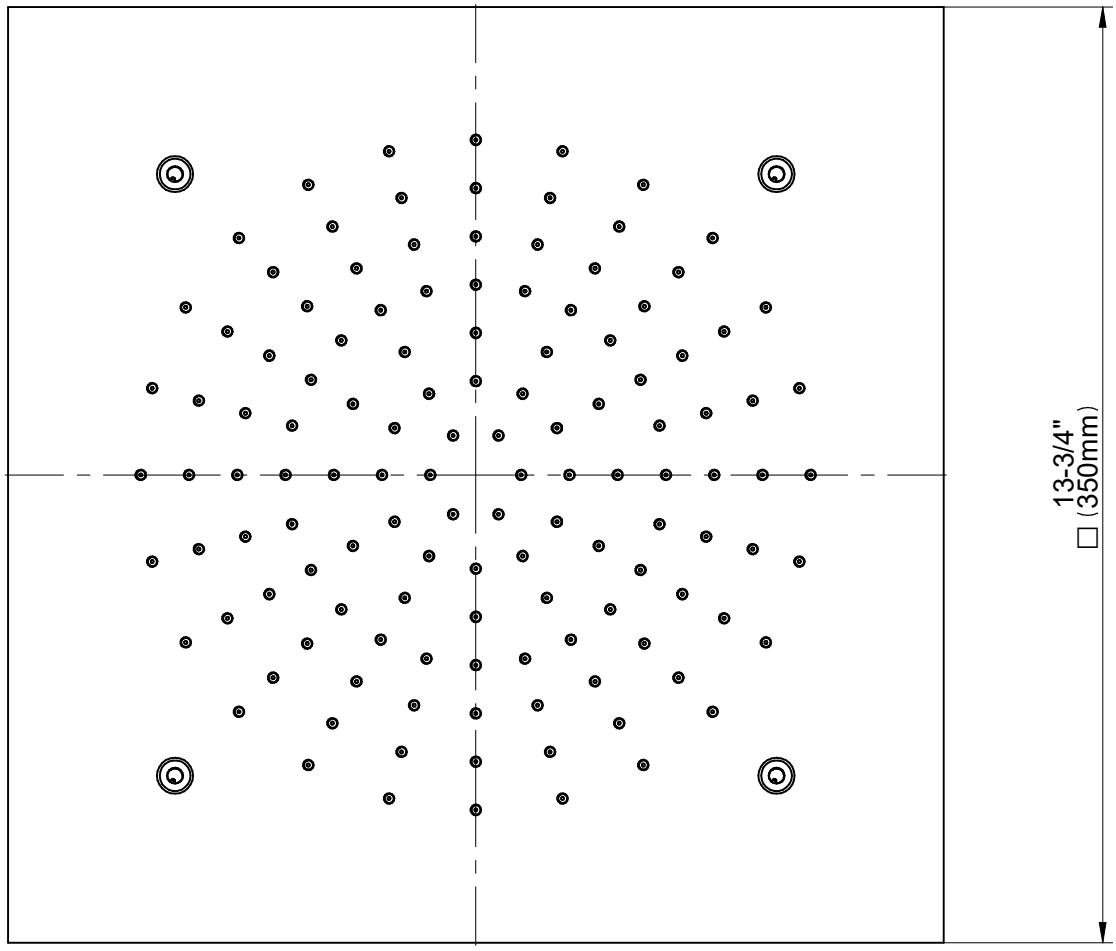

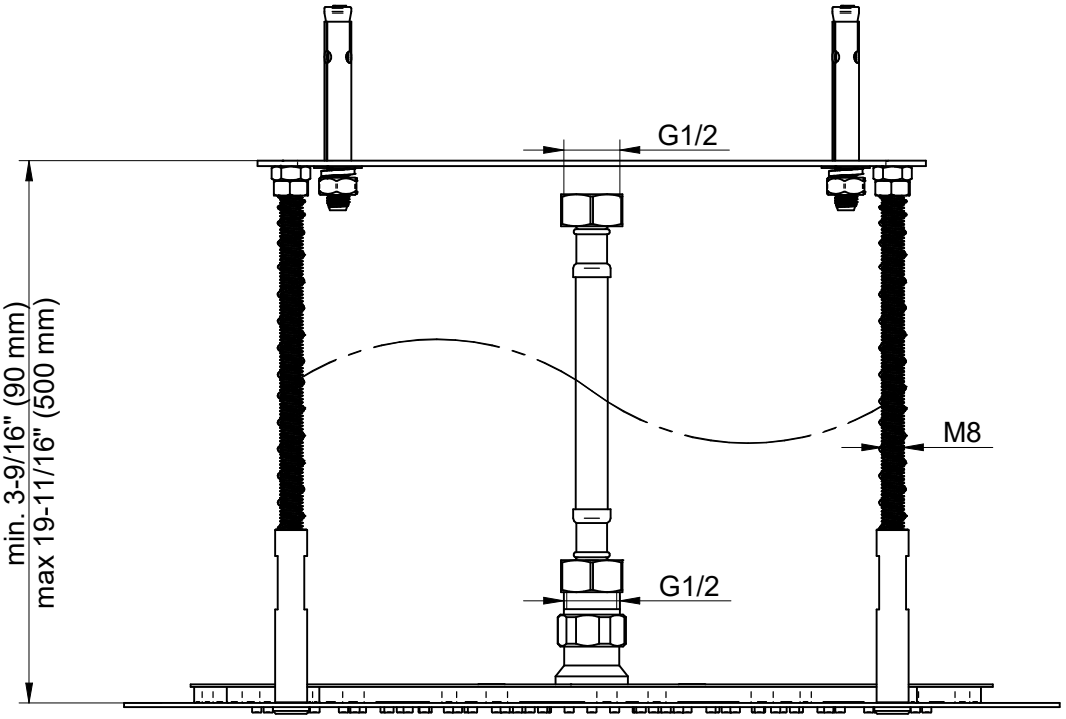

GRAFF®
Art of Bath