E-6856-LM47B

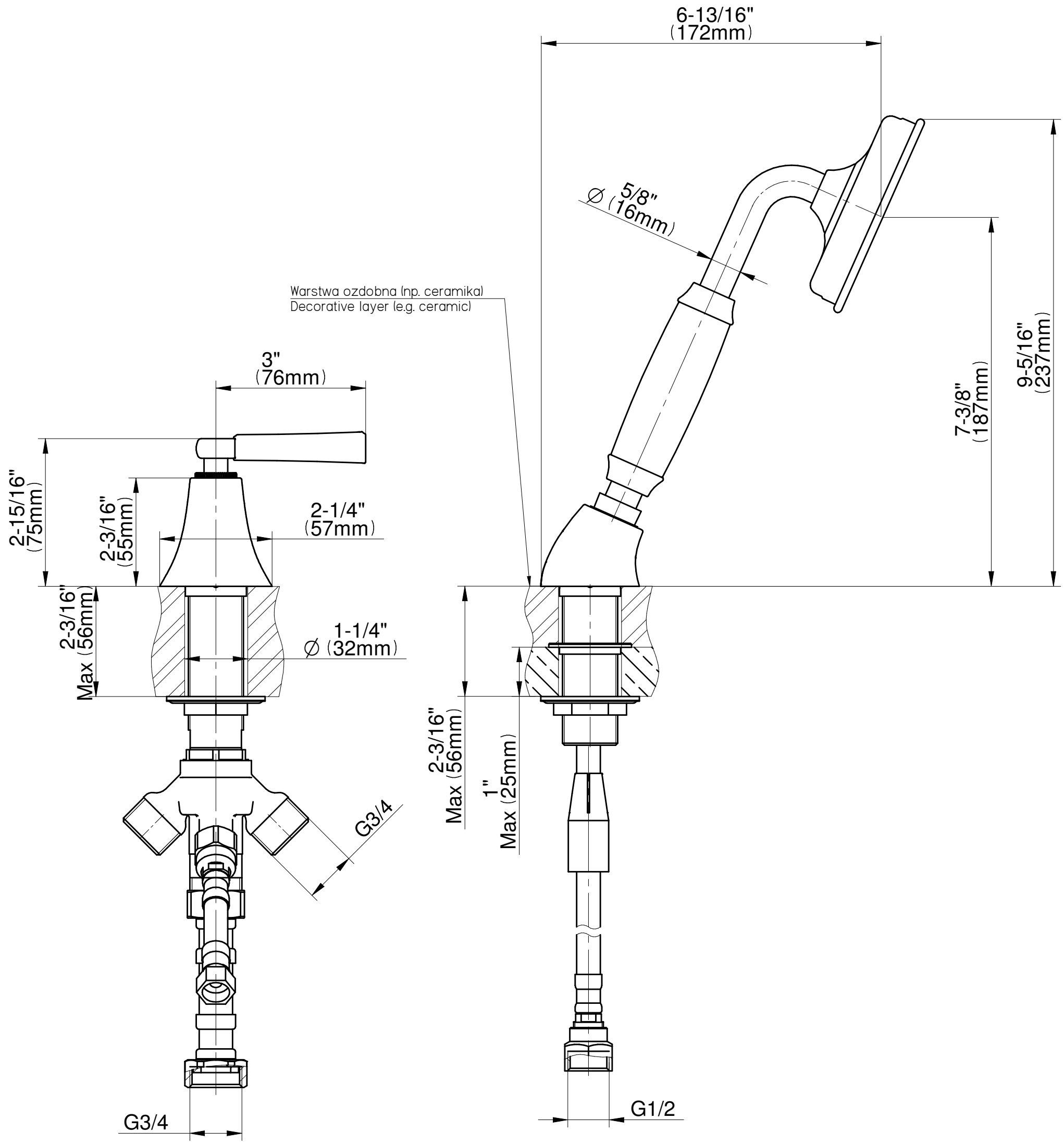

GRAFF®

CUTTING EDGE DESIGN