E-8052C

M-Series Series

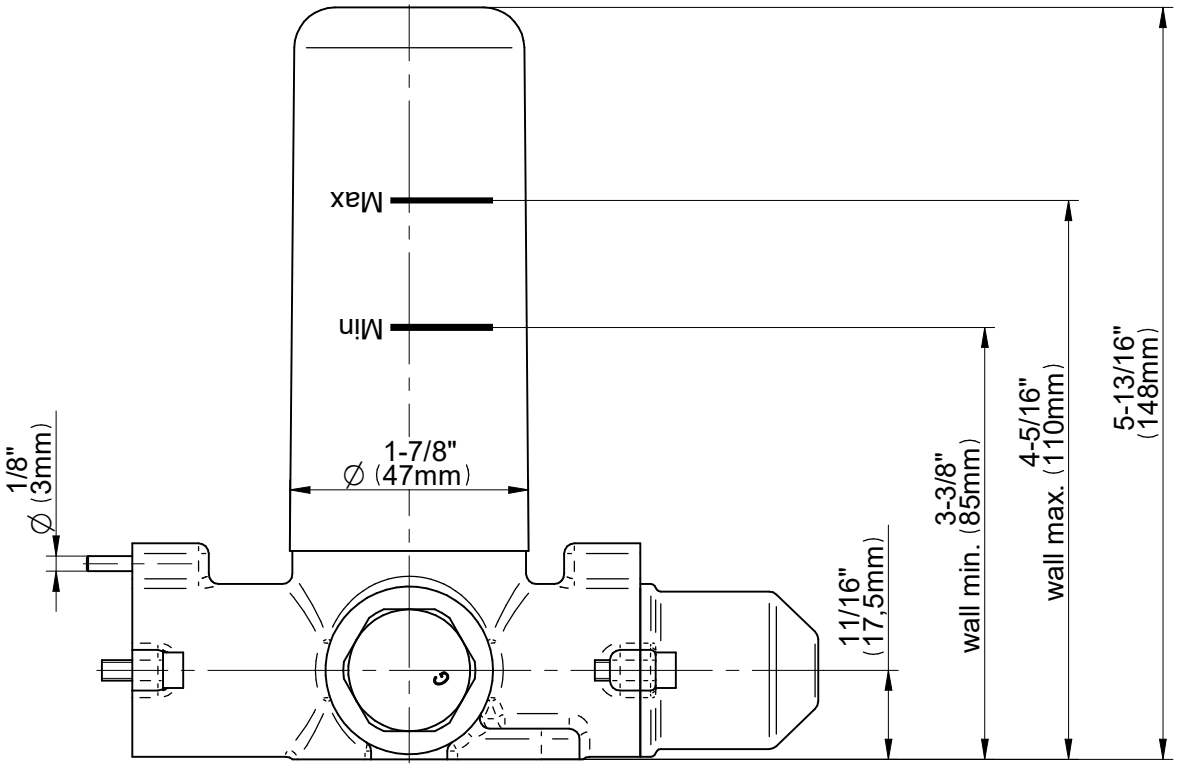

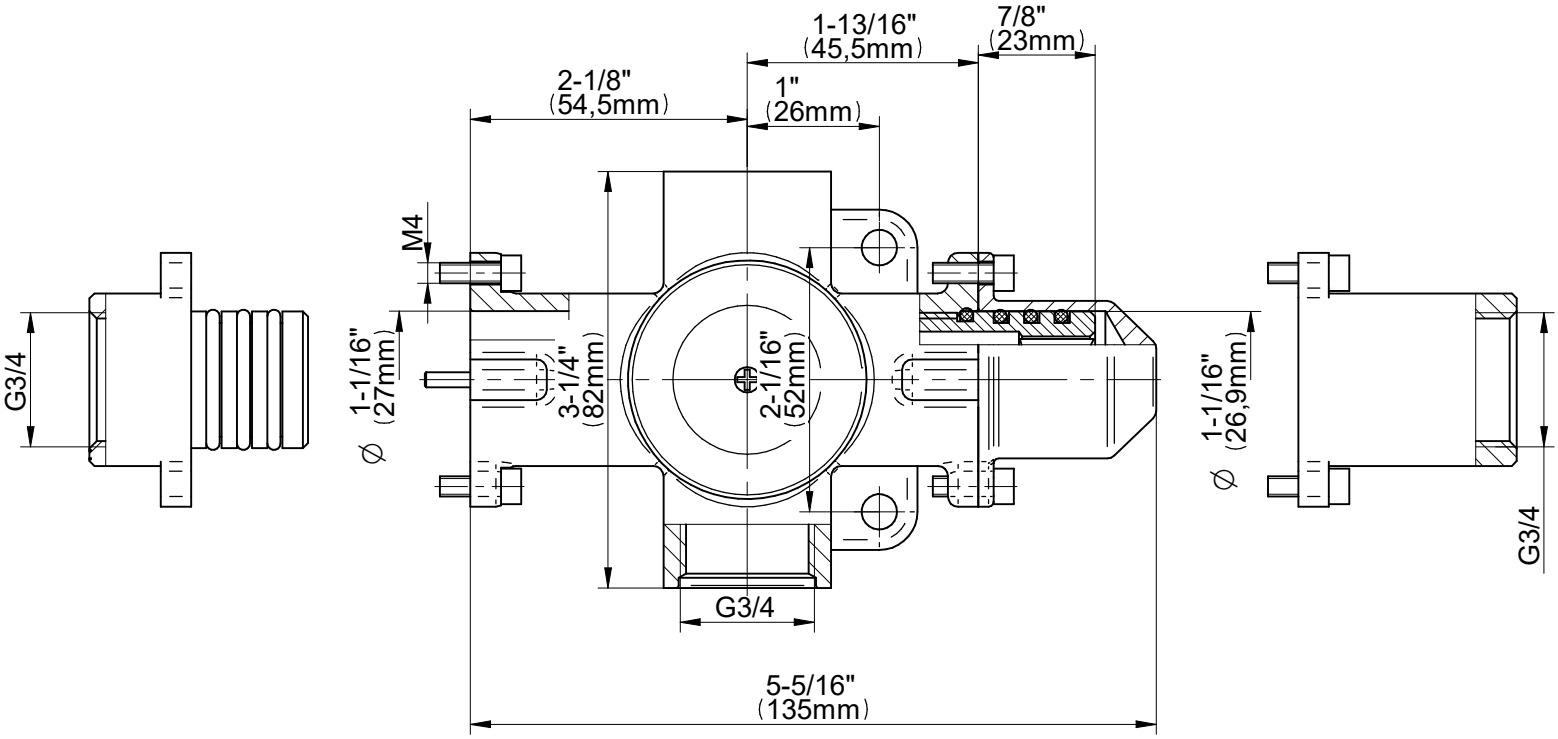

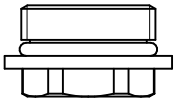

GRAFF®
Art of Bath